Unit 9: Electrons in the Atom

Fair warning: this outline is pretty redundant. The same concepts are explained multiple times because they apply to multiple sections (quantum numbers, electron configuration, and orbital diagrams are all based on the same set of rules). The idea is that if one explanation doesn't work for you, hopefully one of the other explanations will click. ☺

1. Vocabulary overview:
    a. Energy levels (n) are made of sublevels (*l*).
    b. Sublevels (*l*) are made of orbitals (m_l)
    c. Orbitals contain two electrons each—one spin up (m_s = ½) one spin down (m_s = -½)

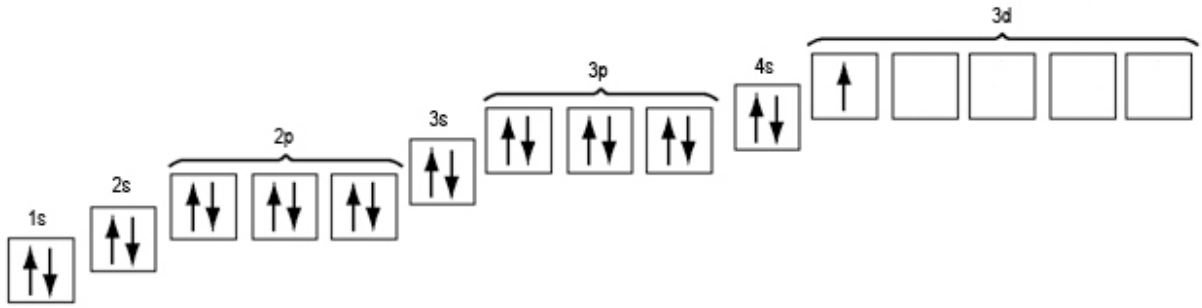

    d. Energy level/Sublevel:
        i. The diagram above shows the ONE sublevel in the 1st energy level (1s)
        ii. The diagram above shows the TWO sublevels in the 2nd energy level (2s & 2p)
            1. The "2" at the beginning of the sublevel labels (2s & 2p) tells us they are in the second energy level (n=2)
        iii. The diagram above shows THREE sublevels in the 3rd energy level: 3s, 3p, and 3d
        iv. Only one sublevel in this diagram is from the 4th energy level (4s is part of n=4).
            1. The fourth energy level *can* contain four sublevels (4s, 4p, 4d, 4f) but the atom diagrammed above only has electrons in 4s—it doesn't have enough electrons to need the other sublevels in n=4.
    e. Sublevel/Orbital
        i. Note that the s-sublevels (1s, 2s, 3s, 4s) are represented by only ONE orbital (box) each.
            1. There is always only 1 orbital in an s-sublevel.
            2. The one s-orbital is called "0."
        ii. The p-sublevels (2p, 3p) have three orbitals grouped together.
            1. A p-sublevel is always made of three p-orbitals at the same energy.
            2. The three p-orbitals are called "-1, 0, 1"
        iii. The d-sublevel (3d) has five orbitals grouped together.
            1. A d-sublevel is always made of 5 d-orbitals at the same energy.
            2. The five d-orbitals are called "-2, -1, 0, 1, 2"
        iv. No f-sublevels are shown above.
            1. f-sublevels are always made of 7 f-orbitals at the same energy.
            2. The seven f-orbitals are called "-3, -2, -1, 0, 1, 2, 3"
    f. Orbital/Spin:
        i. Each orbital (box) can only hold 2 electrons *regardless of what type of orbital it is or what sublevel it is in.*

ii. The two electrons must have opposite spins, so there are only two possibilities. Ever.

g. So the third ENERGY LEVEL
   i. Is made of three sublevels (3s, 3p, 3d)
   ii. Those SUBLEVELS are made of smaller pieces called ORBITALS.
      1. 3s = 1 orbital; 3p = 3 orbitals; 3d = 5 orbitals;
      2. ∴ 3rd energy level contains 1 + 3 + 5 = 9 orbitals total
   iii. Each ORBITAL can hold 2 ELECTRONS
      1. If the 3rd energy level (n=3) contains 9 orbitals
      2. 9·2 = 18 electrons are needed to fill it completely.
      3. (It isn't full in the diagram, but if it *was* full, it would hold 18 electrons.)

2. Quantum Numbers
   a. Quantum numbers are used to give an "address" to each electron in an atom
      i. We identify electrons according to how much *energy* they have instead of location (because Heisenberg Uncertainty makes locations impossible to determine).
      ii. Quantum numbers identify the energy state of electrons.
   b. **Pauli Exclusion Principle:** No two electrons in one atom can have identical energies, therefore no two electrons in one atom will have the same set of four quantum numbers.
   c. The 1st or **principal quantum number**
      i. Also called: primary quantum number
      ii. Describes the relative size of the electron cloud and its distance from the nucleus.
      iii. Has the symbol: n
      iv. Can range from: 1 to ∞
         1. On a periodic table, can be determined by: the row number
            a. Each block of the periodic table begins with a different row number
               i. s begins with row 1
               ii. p begins with row 2
               iii. d begins with row 3
               iv. f begins with row 4
         2. Periodic table range: 1 to 7
      v. The nth energy level
         1. Can contain up to $2n^2$ electrons
         2. In n^2 orbitals (two electrons per orbital—one spin-up, one spin-down)
         3. Can contain n sublevels. For example:
            a. The 1st energy level (n=1) only has one sublevel (s)
            b. The 2nd energy level (n=2) has TWO sublevels (s and p)
            c. The 3rd energy level (n=3) has THREE sublevels (s, p, & d)
   d. The 2nd or **Azimuthal quantum number**
      i. Also called: angular momentum quantum number or sublevel quantum number
      ii. Describes the shape of the electron cloud.
      iii. Has the symbol: *l (lowercase L)*
      iv. Can range from: 0 to n-1
         1. On a periodic table, can be determined by: the block
         2. Periodic table range: 0 to 3
            a. 0 = s block
            b. 1 = p block
            c. 2 = d block
            d. 3 = f block

e. The current periodic table only contains four sublevels, but higher sublevels exist as well. (4 = g block, 5 = h block, etc)

v. The *l* sublevel:

1. Contains $2 \cdot l + 1$ orbitals
   a. s block: $l = 0$; $\therefore$ 2*0 + 1 = 1 orbital
   b. p block: $l = 1$; $\therefore$ 2*1 + 1 = 3 orbitals
   c. d block: $l = 2$; $\therefore$ 2*2 + 1 = 5 orbitals
   d. f block: $l = 3$; $\therefore$ 2*3 + 1 = 7 orbitals
2. Exists in any energy level where n is at least ONE digit larger than *l*.

e. The 3rd or **Magnetic quantum number**

i. Also called the orbital quantum number or orientation quantum number

ii. Describes the orientation in space of each orbital.

iii. Has the symbol: m_l (lowercase M, subscript lowercase L)

iv. Can range from: *l* to *-1*

1. On the periodic table, the options depend on the block number.
   a. s block: $l = 0$; $\therefore$ $m_l = 0$; (1 orbital)
   b. p block: $l = 1$; $\therefore$ m_l = -1, 0, 1; (3 orbitals)
   c. d block: $l = 2$; $\therefore$ m_l = -2, -1, 0, 1, 2; (5 orbitals)
   d. f block: $l = 3$; $\therefore$ m_l = -3, -2, -1, 0, 1, 2, 3; (7 orbitals)

v. Since all orbitals within a given sublevel are at the same energy, the electrons choose orbitals at random. So do we, unless we are assigning quantum numbers to multiple electrons in the same atom (then we must be careful to obey the Pauli Exclusion Principle and Hund's Rule)

vi. Different orbitals within a sublevel are sometimes referred to as "degenerate." This is just a fancy way of saying they have the same energy.

f. The 4th or **Spin quantum number**

i. Describes the spin of the electron.

ii. Has the symbol: m_s

iii. Can be +1/2 or -1/2

1. This is NOT a range. There are only two choices—no other numbers allowed.
2. It must be written as a fraction– no decimals allowed!
3. This quantum number is NOT dependent on any of the other quantum numbers—the two choices do not change regardless of periodic table position or other issues.

iv. Is determined by: whether the electron's magnetic field is "spin up" or "spin down"

1. The two spins are worth the same amount of energy, so the **first** electron in a sublevel chooses its spin at random. Subsequent electrons in the sublevel will have the same spin until every orbital contains one electron. (Because of the "spin parallel" requirement in Hund's Rule.)
2. When the electrons begin to "pair up" the second electron to enter an orbital will have the opposite spin of the first one. (Because of the Pauli Exclusion Principle)

3. Electron Configuration

a. The *electron configuration* of an atom gives the location of each electron in the atom.

i. The total number of electrons in a neutral atom is equal to the number of protons.

ii. The number of protons in an atom is given by the atomic number. (Z)

iii. These 'locations' are actually assignments of the *energy level* of the electrons.

b. **The Aufbau Principle**: Electrons will always fill the lowest energy levels first.

i. No electrons will occupy high energy states unless the lower states are already full.
ii. Aufbau means: "build upon"—high energy electrons build upon a foundation of lower energy electrons.
iii. This is sometimes called the "Lazy Tenant Rule." (Electrons don't climb the stairs to a higher energy unless all the low-level sublevels are already full.)
iv. The **Aufbau *Series*** is the name sometimes given to the order in which the sublevels fill (1s,2s,2p,3s,3p,4s,3d,4p,5s,4d,5p,6s,4f,5d,6p,7s,5f,6d,7p…)

c. The available energy levels are the same for *every* element.
   i. The third electron in sodium will fill the third 'opening' for an electron.
   ii. The third electron in magnesium will also fill the third 'opening' for an electron.
   iii. That means that *any* third electron (regardless of the element it is a part of) will have that same energetic 'address'. (The same electron configuration.)
   iv. This means that the electron configuration of every element on the periodic table is a shorter version of the following, which is the electron configuration of #118 (ununoctium):

$$1s^2 2s^2 2p^6 3s^2 3p^6 4s^2 3d^{10} 4p^6 5s^2 4d^{10} 5p^6 6s^2 4f^{14} 5d^{10} 6p^6 7s^2 5f^{14} 6d^{10} 7p^6$$

d. **The Pauli Exclusion Principle** states that: No two electrons in an atom may occupy the same quantum state.
   i. No two electrons in an atom may have the same four quantum numbers.
      1. Therefore: Each orbital may contain a maximum of 2 electrons.
      2. Therefore: Electrons in the same orbital must have opposite spins.

e. **Hund's Rule** states that: electrons always enter degenerate orbitals singly, spin-parallel, before pairing up.
   i. Singly means "one per orbital"
      1. If there are three orbitals all at the same energy (like in the p-sublevel) and there are three electrons in the p-sublevel, each electron will choose a different orbital
      2. Because electrons have the same charge, they repulse one another– they don't want to be any closer together than they have to be (because like-charges repel).
      3. The electrons are like siblings that hate each other. If there are three kids and three rooms, they are definitely each going to take their own room– not decide to all share a room and leave the other rooms empty. That would just be silly.
      4. This is sometimes called the "**Empty Bus-Seat Rule**"
      5. This means that electrons sharing the p-sublevel of an atom will use all three options for the 3rd quantum number (1, 0, -1) once before using any of them a second time.
   ii. "Spin-parallel" is a fancy way of saying "pointing the same direction."
      1. The "spin" of the electron specifies the direction of the magnetic field it is generating
         a. When electrical charge moves, a magnetic field is generated
         b. Since electrons have charge *and* move, they are constantly creating magnetic fields
            i. If you care: this means that whenever electricity is flowing through a wire, a magnetic field is being generated– it is small, but measureable. This results in problems when there are a lot of electric wires going the same direction– say ten strands of lights wrapped around

a Christmas tree... if the Christmas tree is next to the television in your living room, the magnetic field from all the light strands might be enough to confuse the screen of a CRT television. (The colors will go a bit wonky– just like they would if you held a regular magnet to the screen. Don't do that.)

ii. Psst—remember how J.J. Thomson deflected the electron beam in the cathode ray tube with a magnet? Same deal—"CRT" stands for "cathode ray tube"—the magnetism generated by Christmas lights can deflect the cathode rays in CRT screens.

c. Magnets like to line up facing the same direction. (Have you tried to stack magnets? It only works when they are the same direction.) Because of this, unpaired electrons will choose the same direction to "spin."

i. If there are three electrons in a p-sublevel they will each choose a different orbital (because electrons hate each other and they don't want to share orbitals) but all three will "point" the same direction (either all three will be spin-up (+½) or all three will be spin-down (-½)).

ii. If there are four electrons in a p-sublevel, the fourth one will have to choose the opposite spin, because it is impossible to have two electrons with the same spin in the same orbital– it would violate the Pauli Exclusion Principle.

iii. tl:dr;

1. Same spin in *different* orbitals = yay! Spin-parallel! :)
2. Same spin in the *same* orbital = booooo. That's against the law. :(

f. Electrons will normally occupy the set of orbitals that give the atom the lowest possible energy.

i. This "lowest energy" is called the **ground state**.

ii. Any electron *not* occupying its lowest available sublevel is said to be "excited" or in an **excited state**.

g. Electron Configurations and the periodic table:

i. Only **s** and **p** electrons are in the outer energy level.

1. The most electrons possible in the outer energy level is 8. (2 in the s-sublevel, 6 in the p-sublevel)
2. That's where the term "full octet" comes from.
3. The most stable atoms (noble gases) have full outer energy levels.

a. Completely filled sublevels give stability.

b. Half-filled sublevels give stability.

~~h. Exceptions to the Aufbau Principle: NOT COVERED OR TESTED THIS YEAR~~

~~i. Elements sometimes 'promote' electrons to create full or half-full sublevels.~~

~~1. Copper (#29) is expected to have an electron configuration of [Ar-18]$4s^2 3d^9$~~

~~a. This configuration would end with a "full" 4s, but a "in-between" 3d – not very stable~~

~~b. Instead, copper promotes one of its 4s electrons to the 3d.~~

~~c. This gives copper a configuration of [Ar-18]$4s^1 3d^{10}$~~

~~d. Now the 4s is exactly half-full (pretty stable) and the 3d is completely full (very stable)~~

~~e. This makes copper more stable overall and somewhat less likely to ionize than other similar elements.~~

~~2. In the same way, chromium (#24) promotes a 4s electron to the 3d sublevel, changing its electron configuration from the expected [Ar-18]$4s^2 3d^4$ to [Ar-18]$4s^1 3d^5$~~

~~ii. This kind of promotion only works from s-sublevel to d-sublevel because the two are very close in energy. Electrons can't be promoted from s-sublevel to p-sublevel because their energies are too far apart. Most elements have no choice but to be unstable. (This makes them much more reactive, since losing or gaining electrons is the only way to change their electron configurations.)~~

4. Orbital (electron/arrow) Diagrams
   a. Orbital diagrams always fill from the bottom to the top, because the bottom represents the lowest energy electrons. (And electrons are lazy– the **Aufbau Principle**!)
   b. Each arrow represents an electron—the direction of the arrow indicates its spin quantum number.
   c. Each box (or blank) represents an orbital.
      i. One orbital can hold 2 electrons– regardless of what sublevel it is.
         1. The two electrons in the orbital must have opposite spins (spin up and spin down) (**Pauli Exclusion**!)
   d. Joined boxes (or grouped blanks) represent sublevels. (Sublevels should always be LABELED on orbital diagrams.)
      i. s sublevels have1 orbital box per sublevel
         1. because there is 1 s-orbital: the 0
      ii. p sublevels have 3 joined orbital boxes per sublevel
         1. because there are 3 p-orbitals: 1, 0, -1
      iii. d sublevels have 5 joined orbital boxes per sublevel
         1. because there are 5 d-orbitals: 2, 1, 0, -1, and -2
      iv. f sublevels have 7 joined orbital boxes per sublevel
         1. because there are 7 f-orbitals: 3, 2, 1, 0, -1, -2, and -3
   e. Sublevels fill in order of the **Aufbau Series**—the same order as electron configuration. Same rules apply!
      i. In each box only one arrow up and one down. (If they pointed the same direction it would violate the **Pauli Exclusion Principle**.)
      ii. Arrows don't pair up until they have to. (**Hund's Rule**)
      iii. Arrows enter degenerate orbitals (orbitals in the same sublevel) spin-parallel (because they're like little magnets) (**Hund's Rule**)
      iv. Chemists usually only write half of the "point" on the arrows. You can draw the whole arrow if you want to, but it is standard for orbital diagrams to be written with half-point arrows like this:

      v. When in doubt, write out the electron configuration first, then write the orbital boxes for the sublevels in the same order as the configuration.
         1. Make sure you write enough boxes for all the orbitals in each sublevel– even if they are not all going to end up with an electron.
            a. The orbital diagram for Sc (#21) should end with *five* blanks (or boxes) representing its 3d sublevel *even though it will have only one arrow in the 3d*.

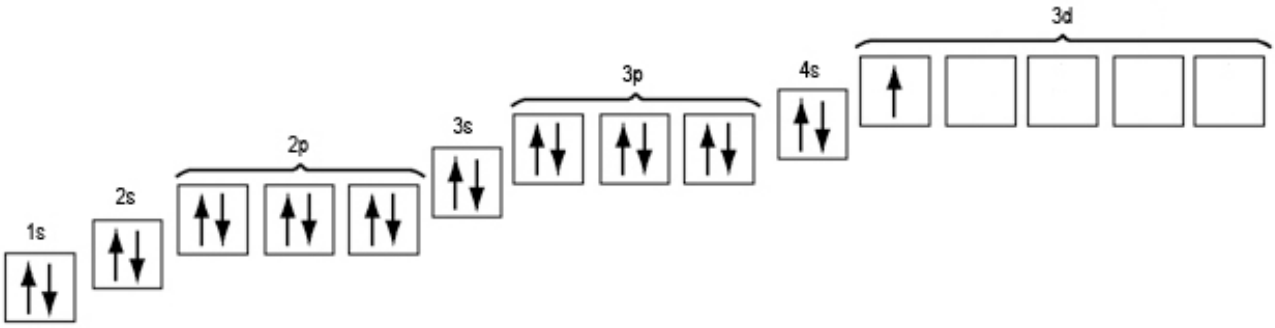
1s
2s
2p
3s
3p
4s
3d